Machine Translated by Google

# MIX2018

## **4.8W** Single Channel Class **F** Audio Power Amplifier

describe

MIX2018 is a high efficiency, filter-free 4.8W mono Class F speaker.
The ultra-low EMI is very suitable for portable FM amplifiers.
In portable devices.

The single-ended input architecture and extremely high PSRR of MIX2018 effectively improve
The MIX2018 has the ability to suppress RF noise. No filter is required for PWM
Modulation structure and built-in gain reduce external components and PCB area
Up to 90% efficiency, fast start-up
The operating time and small package size make MIX2018 a portable audio
The best choice for video products.

MIX2018 has a shutdown function, which greatly prolongs the system's standby time.
Overheat protection function enhances system reliability. POP noise suppression function improves
Improves the system's auditory experience and simplifies system debugging

MIX2018 provides ESOP8 package with heat sink

characteristic

ÿ Unique FM interference-free architecture
ÿ Class D output power:
ÿ4.8W (VDD=5.0V, RL =2ÿÿTHD+N=10%) ÿ Class F output power:
ÿ4.8W (VDD=5.0V, RL =2ÿÿTHD+N=10%) ÿ Low distortion and low noise
ÿ Power-on POP sound suppression function
ÿ Shutdown current is less than 1uA
ÿ Overheat protection function

application

ÿ Loudspeaker
ÿ Portable speakers/Card speakers
ÿ Card speaker/USB speaker

Typical application circuit diagram

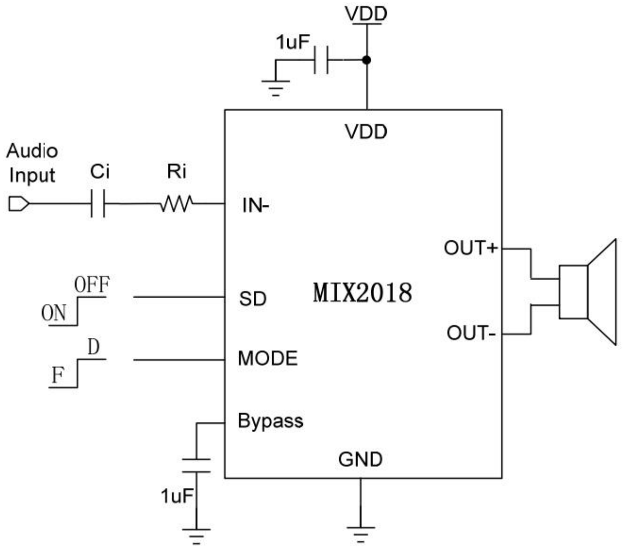


Pinout

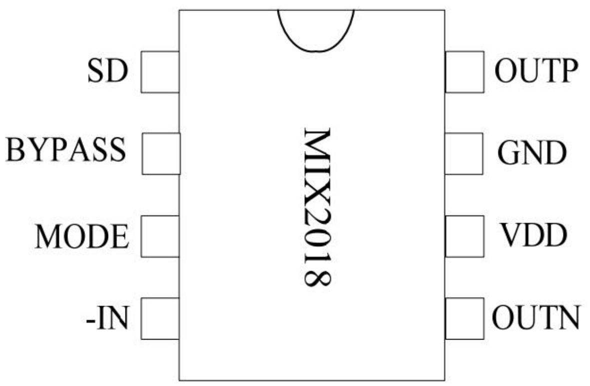

Machine Translated by Google



Functional Block Diagram

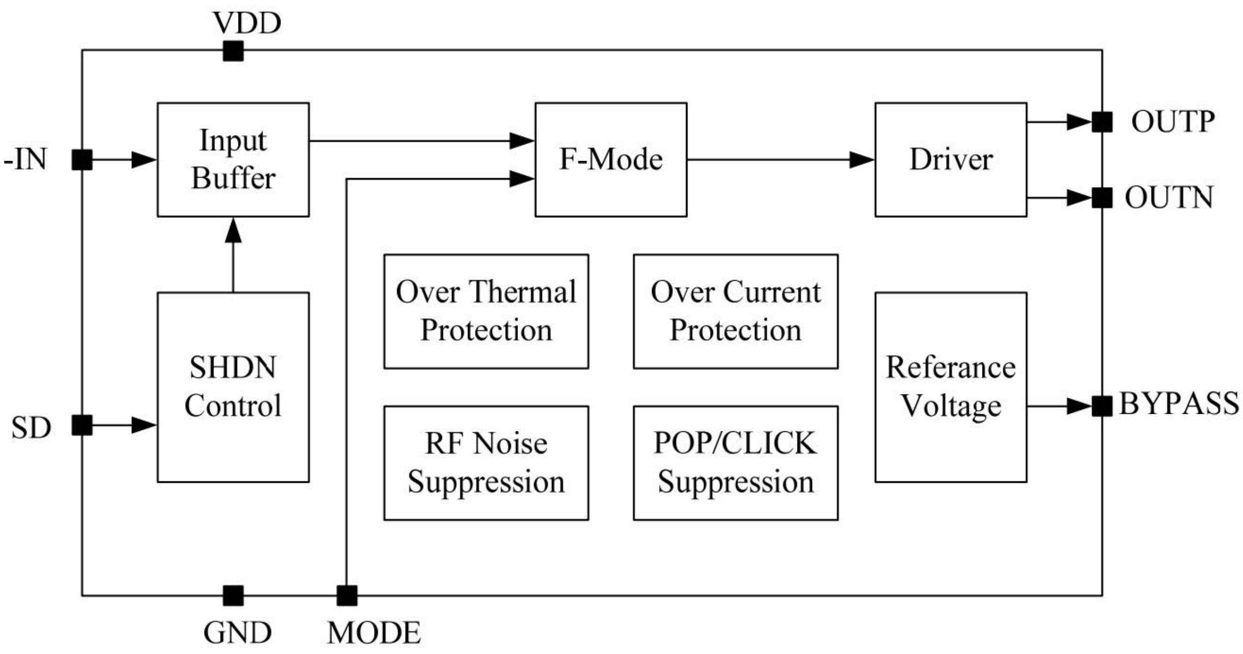


Pin Description

| Pin Symbol | | I/O | Description |
|---|---|---|---|
| 1 | SD | I | System shutdown control (high level shutdown, low level work) |
| 2 | BYPASS | I | Reference voltage |
| 3 | MODE | I/O | Class D, Class F selection |
| 4 | -IN | I | Audio negative input terminal |
| 5 | OUTN | O | Audio negative output terminal |
| 6 | VDD | | power supply |
| 7 | GND | | land |
| 8 | OUTP | O | Audio positive output terminal |
| 9 | GND | | Chip bottom heat sink grounding |

Machine Translated by Google



Ordering Information

| Part Number | Encapsulation | Surface printing | Package |
|---|---|---|---|
| MIX2018 | ESOP8 | MIX2018<br>XXXXXX | 2500 pcs/roll |

Absolute Maximum Ratings

| | | |
|---|---|---|
| VDD | Supply voltage Input | -0.3V to 5.5V |
| WE | voltage Operating | -0.3V to VDD+0.3V |
| FACING | temperature Junction | -40°C to 85°C |
| TJ | temperature | -40°C to 125°C |
| TSTG | Storage temperature | -65°C to 150°C |
| TSLD | Soldering temperature | 300°C, 5sec |

Recommended Ratings

| | | | MIN | MAX | UNIT |
|---|---|---|---|---|---|
| VDD | Supply voltage | VDD | 2.5 | 5.1 | V |
| HIV | SD high level | VDD=5.0V | 2 | | V |
| | MODE high level | | 2 | | |
| WILL | SD low level | VDD=5.0V | | 0.6 | |
| | MODE low level | | | 0.6 | |

Thermal resistance parameters

| Parameter | Symbol | Package | MAX | UNIT |
|---|---|---|---|---|
| Thermal resistance (Junction to Ambient) | ÿJA | ESOP8 | 90 | °C/W |
| Thermal resistance (Junction to Case) | ÿJC | ESOP8 | 11 | °C/W |

Machine Translated by Google



**Package Diagram (ESOP8)**

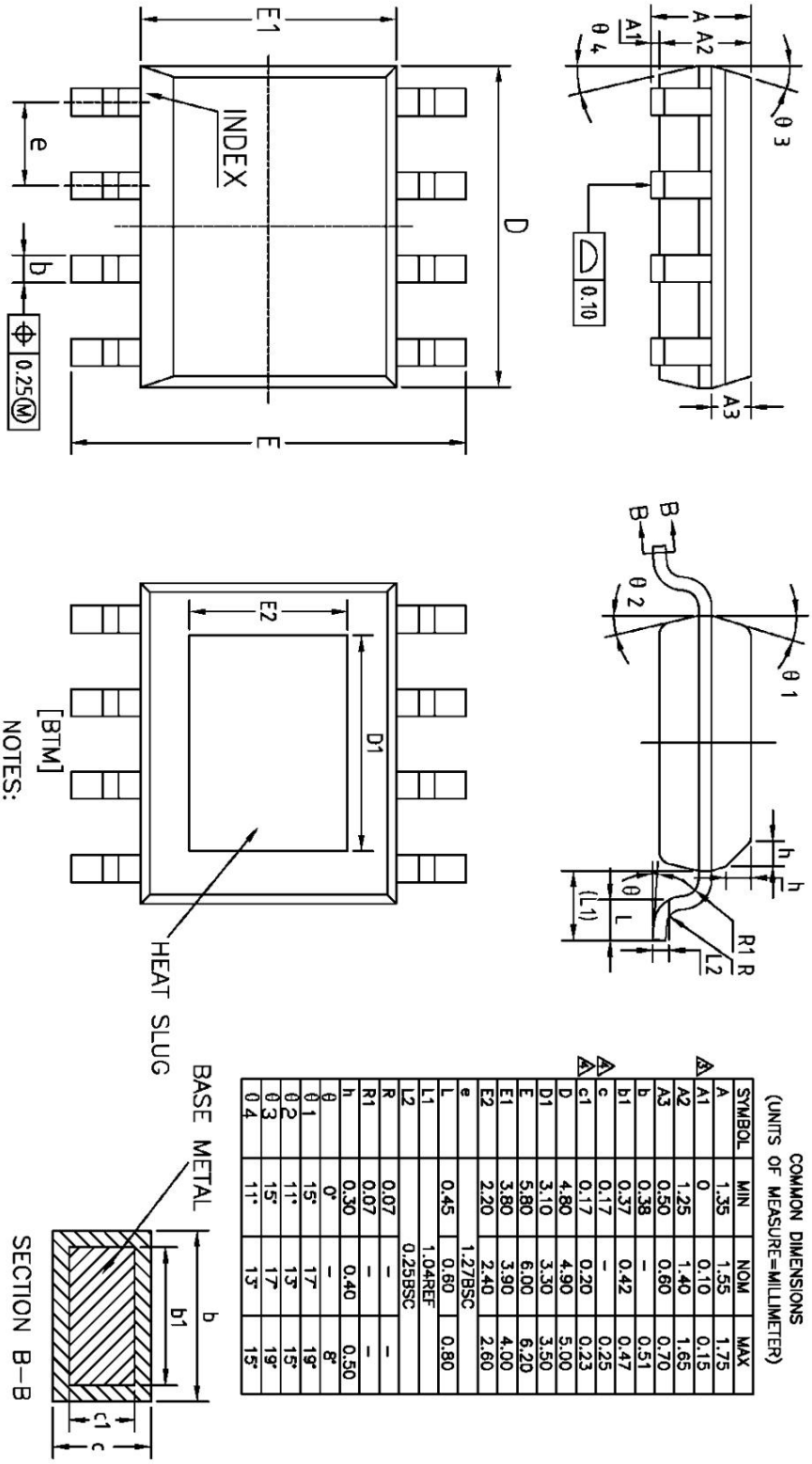


COMMON DIMENSIONS
(UNITS OF MEASURE=MILLIMETER)

| SYMBOL | MIN | NOM | MAX |
|---|---|---|---|
| A | 1.35 | 1.55 | 1.75 |
| A1 | 0 | 0.10 | 0.15 |
| A2 | 1.25 | 1.40 | 1.65 |
| A3 | 0.50 | 0.60 | 0.70 |
| b | 0.38 | – | 0.51 |
| b1 | 0.37 | 0.42 | 0.47 |
| c | 0.17 | – | 0.25 |
| c1 | 0.17 | 0.20 | 0.23 |
| D | 4.80 | 4.90 | 5.00 |
| D1 | 3.10 | 3.30 | 3.50 |
| E | 5.80 | 6.00 | 6.20 |
| E1 | 3.80 | 3.90 | 4.00 |
| E2 | 2.20 | 2.40 | 2.60 |
| e | 1.27BSC | | |
| L | 0.45 | 0.60 | 0.80 |
| L1 | 1.04REF | | |
| L2 | 0.25BSC | | |
| R | 0.07 | – | – |
| R1 | 0.07 | – | – |
| h | 0.30 | 0.40 | 0.50 |
| θ | 0° | – | 8° |
| θ 1 | 15° | 17° | 19° |
| θ 2 | 11° | 13° | 15° |
| θ 3 | 15° | 17° | 19° |
| θ 4 | 11° | 13° | 15° |

NOTES:
ALL DIMENSIONS REFER TO JEDEC STANDARD MS-012 AA
DO NOT INCLUDE MOLD FLASH OR PROTRUSIONS.

SECTION B-B